KS1791,2,5,8TXBS
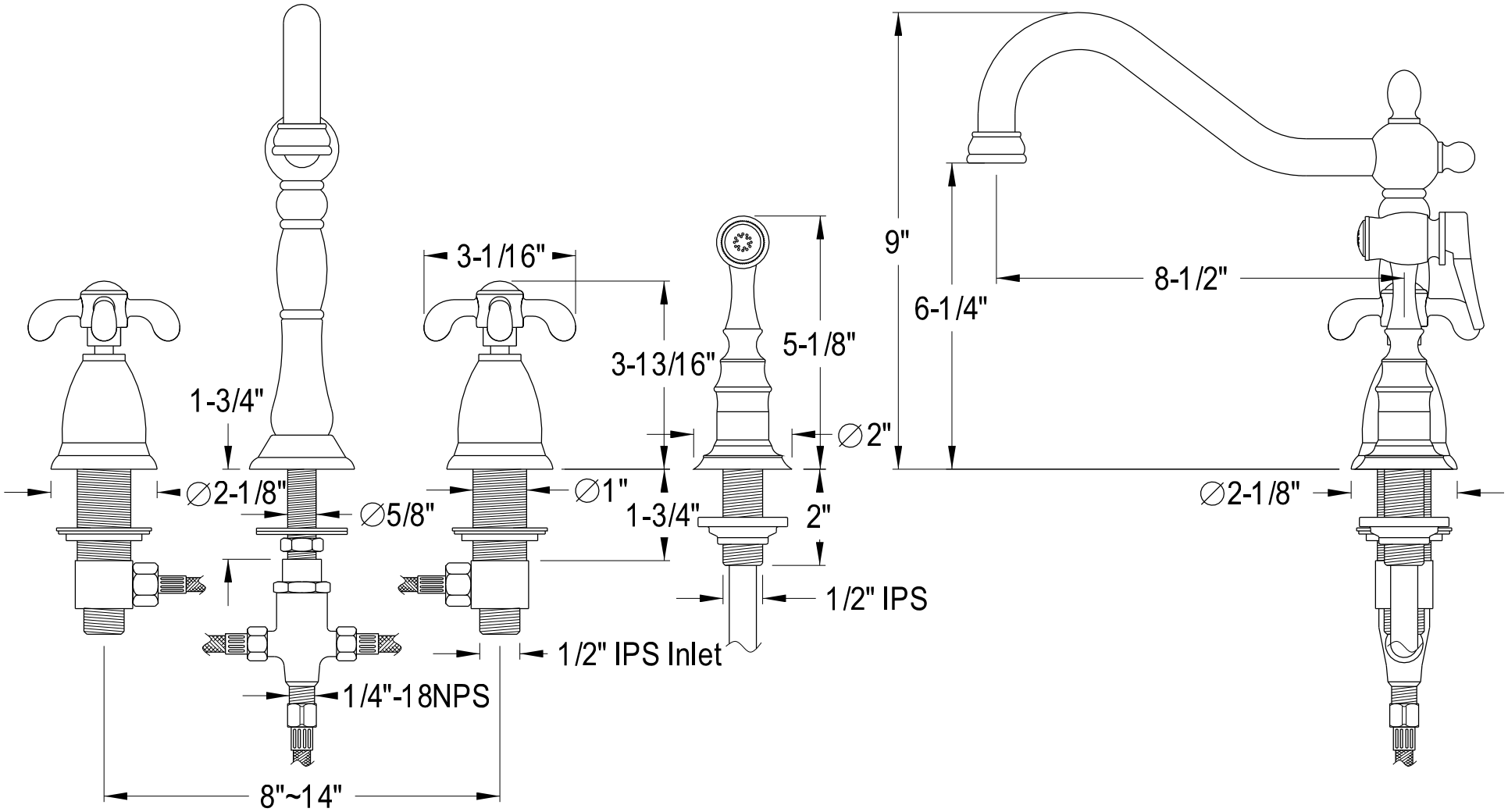
French Country Widespread Kitchen Faucet With Brass Sprayer